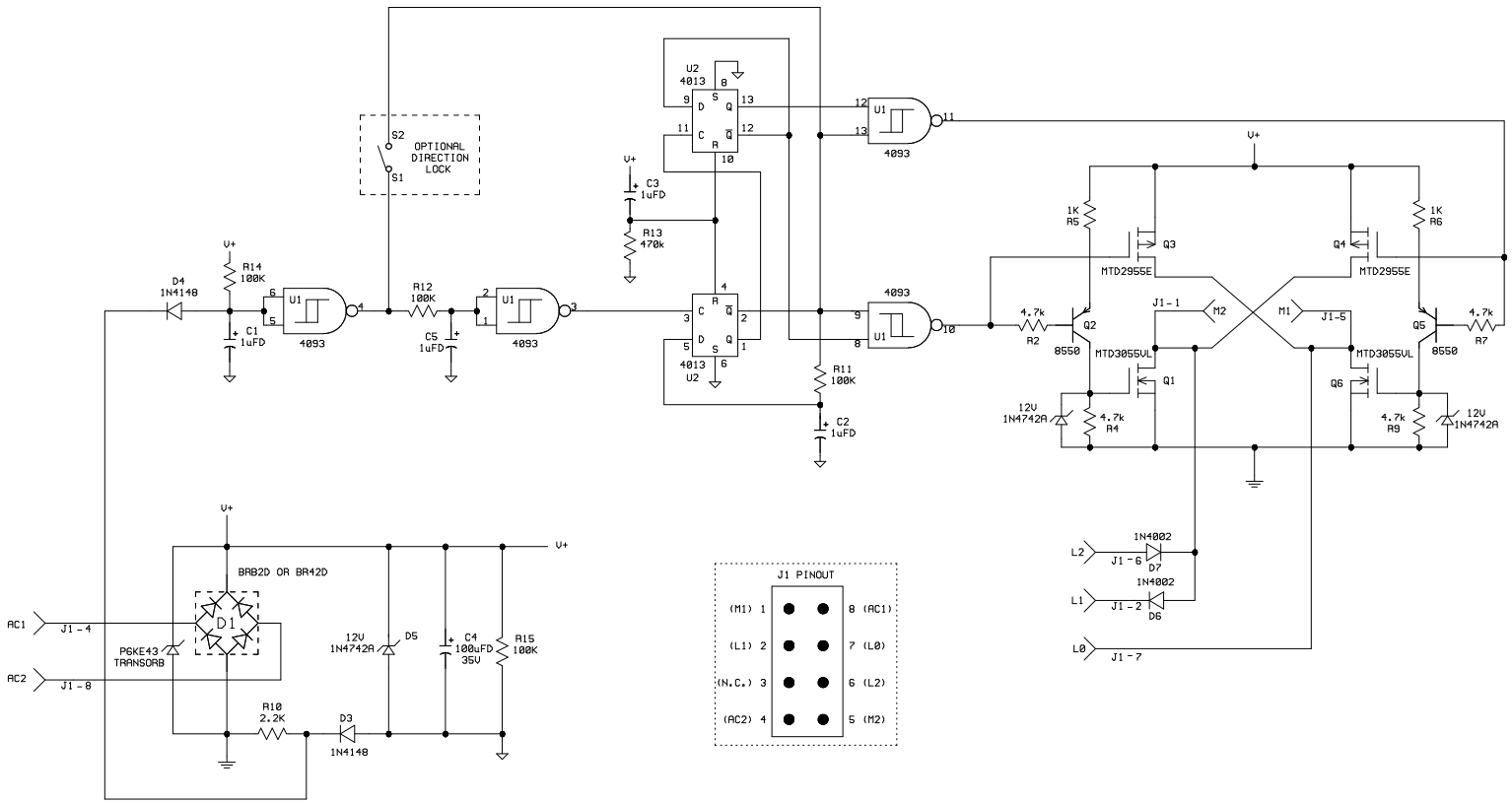

DWG. NO.	SH	REV.

REVISIONS

ZONE	REV.	DESCRIPTION	DATE	APPROVED

QTY REQD	FSCM NO.	PART OR IDENTIFYING NO.	NOMENCLATURE OR DESCRIPTION	MATERIAL SPECIFICATION

UNLESS OTHERWISE SPECIFIED DIMENSIONS ARE IN INCHES TOLERANCES ARE :
FRACTIONS DECIMALS ANGLES
XX
XXX

MATERIAL

FINISH

DO NOT SCALE DRAWING

NEXT ASSY	USED ON

APPLICATION

CONTRACT NO.

FILE: REVUNIT.SCH

APPROVALS	DATE
DRAWN	9-02-97
CHECKED	
ISSUED	

AC REVERSE UNIT

SIZE	FSCM NO.	DWG. NO.	REV
A			0

SCALE

SHEET 1 OF 1